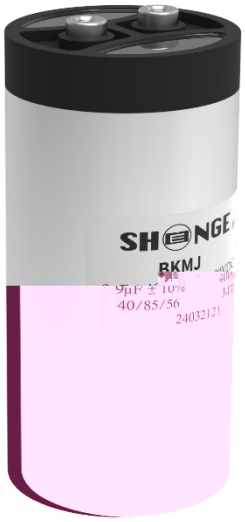
SHENGE
BKMJ
40/85/56
24032121

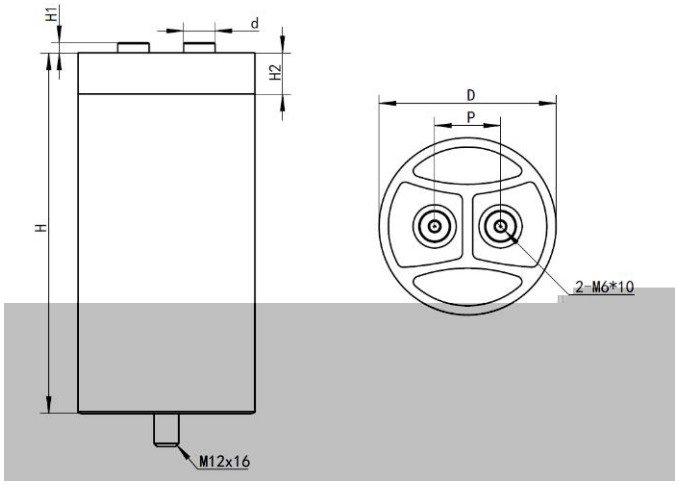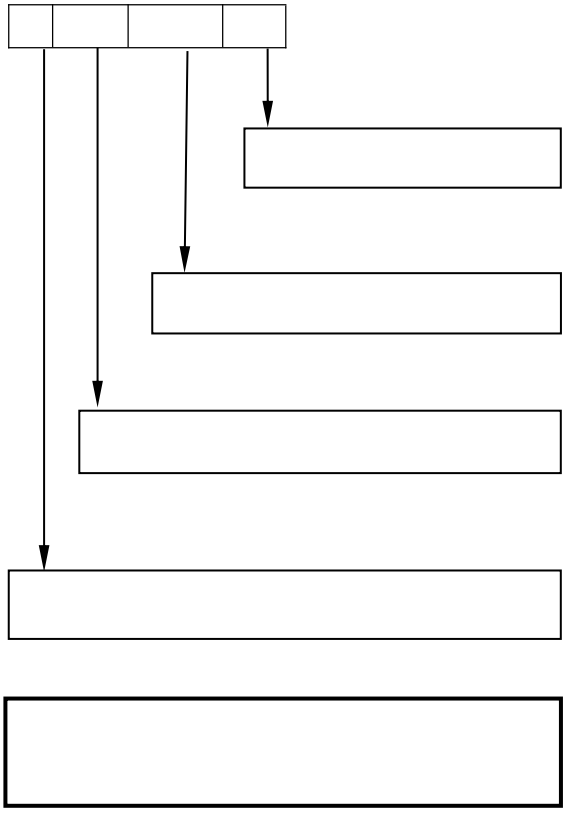
H1
d
H2
D
P
H
2-M6*10
M12x16